Electrolux PROFESSIONAL

Planetary Mixers
Planetary Mixer for Bakery, 40 lt. - Electronic

ITEM #

MODEL #

NAME #

SIS #

AIA #

600275 (MBE40B3)	40 lt Planetary Mixer, bowl detection device and SOLID BPA free safety screen, with 3 fixed speeds and electronic variable speed. Equipped with spiral hook, paddle and whisk. Suitable for bakery preparation
600276 (MBE40B)	40 lt Planetary Mixer, bowl detection device and SOLID BPA free safety screen, with 3 fixed speeds and electronic variable speed. Equipped with spiral hook, paddle and whisk. Suitable for bakery preparation

Short Form Specification

Item No.

Suitable for bakery and pastry making, for kneading, blending and whipping operations. Reinforced body for heavy duty use with 18/8 (AISI 302) 40 litre capacity stainless steel bowl. Reinforced transmission and powerful asynchronous motor (2200W) with 3 fixed speeds (40,80,160 rpm) and electronic variable speed (from 30 to 175 rpm). Bowl detction device allows the mixer to switch on only when the bowl and the safety screen are properly installed and positioned together. Water proof (IP55) and flat touch button control panel with a timer from 0-59 min. Pivoting and removable wire safety screen. Kneading: speed 1 or 2 with hook; Blending: speed 2 with paddle; Whipping: speed 3 with whisk. Supplied with 3 tools: spiral hook, paddle and reinforced whisk.

APPROVAL:

Main Features

- Professional beater mixer designed to withstand the strong demands of bakery and pastry making.
- Delivered with:
  - Spiral Hook, Paddle, Reinforced Whisk and Mixing Bowl for 40 lt
- Kneading speed: "1" with hook.
- Mixing speed: "2" with paddle.
- Emulsifying speed: "3" with whisk.
- Wire safety screen fitted with a removable chute to add products while working, thus ensuring operator safety.
- Pivoting and removable wire safety screen for easier and better cleaning.
- Raising and lowering of the bowl controlled by lever with an automatic locking of the bowl when in the raised position.
- Waterproof touch button control panel with timer, speed setting and display.
- Safety device will automatically stop the machine when the bowl is lowered.
- Maximum capacity (flour, with 60% of hydration) 10 kg.
- Solid BPA-free safety screen, covering the stainless steel wire one, limits the flour and unsafe dust particles when used in bakery and pastry preparation.
- Bowl detection device allows the mixer to switch on only when the bowl and the solid safety screen are properly installed and positioned together.

Construction

- Reinforced body, feet and transmission for heavy duty operations.
- 302 AISI Stainless steel bowl - 40 lt. capacity.
- Electronic speed variator (10 speeds available from 30 to 175 rpm)
- 3 fixed speeds: 40, 80 and 160 rpm.
- Water protected planetary system (IP55 electrical controls, IP23 overall machine).
- Power: 2200 watts.
- Asynchronous motor with high start-up torque.
- The solid safety screen and the stainless steel wire structure are both removable and dismantled for cleaning and are dishwasher safe.
- Adjustable feet to perfect stability.

Included Accessories

• 1 of Bowl 40 lt	PNC 650128
• 1 of Spiral Hook 40 lt	PNC 653092
• 1 of Paddle 40 lt	PNC 653093
• 1 of Reinforced Whisk 40 lt (for heavy duty use)	PNC 653127

Optional Accessories

• 20 lt reduction kit (bowl, spiral hook, paddle, whisk) for 40 lt planetary mixers - bakery models	PNC 650126 ❑

• Bowl 40 lt	PNC 650128	❑
• Bowl scraper 40 lt	PNC 650186	❑
• Spiral Hook 40 lt	PNC 653092	❑
• Paddle 40 lt	PNC 653093	❑
• Fine Whisk 40 lt (for emulsions)	PNC 653094	❑
• Reinforced Whisk 40 lt (for heavy duty use)	PNC 653127	❑
• Bowl trolley for 40/60/80 lt planetary mixers	PNC 653585	❑

The company reserves the right to make modifications to the products without prior notice. All information correct at time of printing.

Planetary Mixers
Planetary Mixer for Bakery, 40 lt. - Electronic

Front

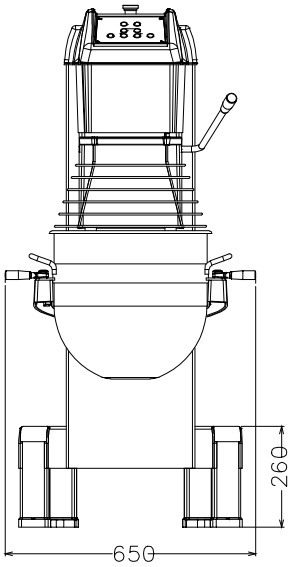

Side

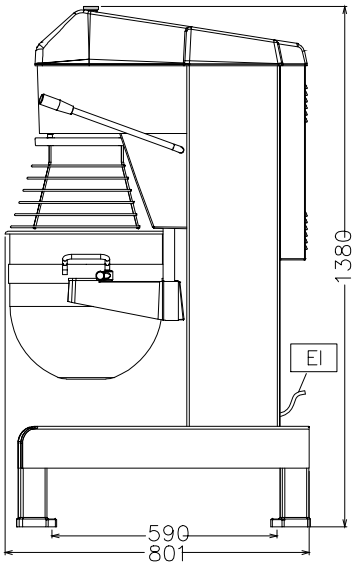

EI = Electrical inlet (power)

Top

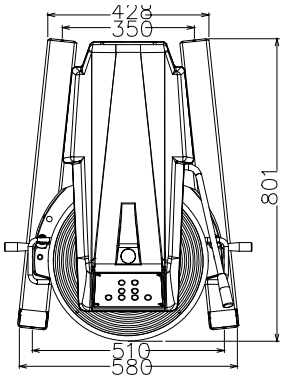

Electric

Supply voltage:	
600275 (MBE40B3)	380-480 V/3 ph/50/60 Hz
600276 (MBE40B)	200-240 V/1N ph/50/60 Hz
Electrical power max.:	2.2 kW
Total Watts:	2.2 kW

Capacity:

Performance (up to):	ISO 9001; ISO 14001 kg/ Cycle
Capacity:	40 litres

Key Information:

External dimensions, Width:	655 mm
External dimensions, Depth:	850 mm
External dimensions, Height:	1370 mm
Shipping weight:	
600275 (MBE40B3)	204 kg
600276 (MBE40B)	203 kg
Cold water paste:	ISO 9001; ISO 14001 kg with Spiral hook
Egg whites:	70 with Whisk

The company reserves the right to make modifications to the products without prior notice. All information correct at time of printing.

2024.10.07